Marbul 1x LED warm dim Tre dim GI

115006XX

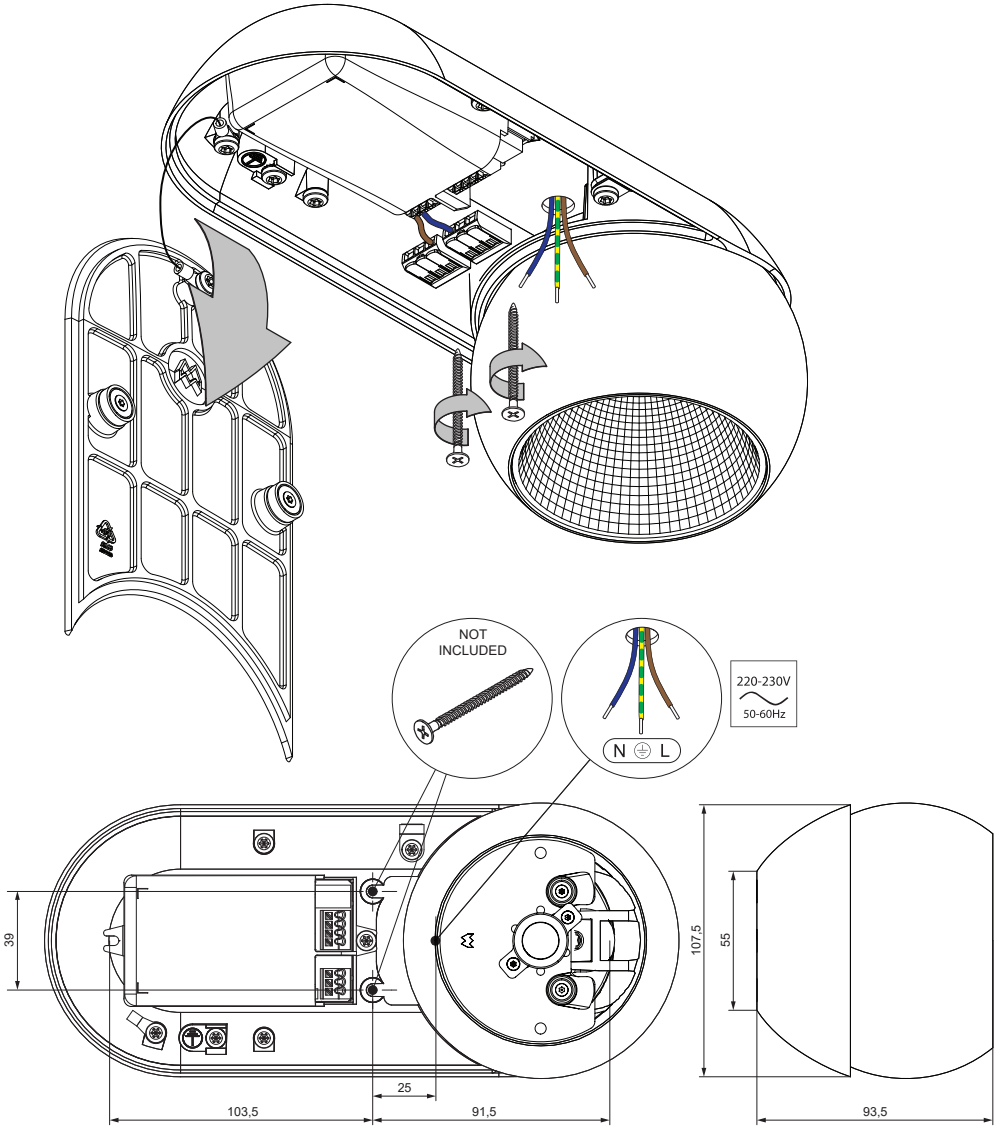

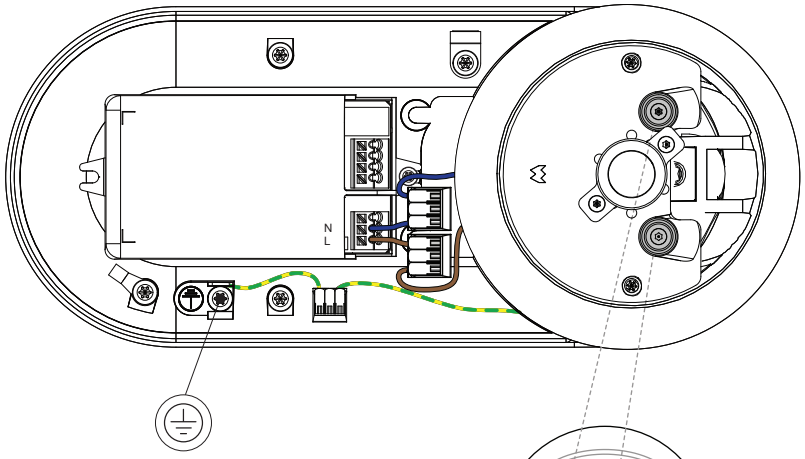

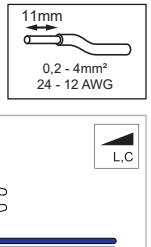

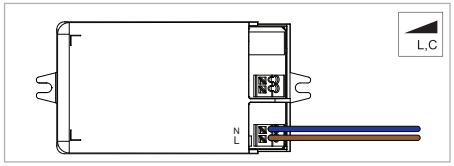

For more detailed information check wiring diagrams in catalogue or technical downloads at www.supermodular.com.

The light source contained in this luminaire shall only be replaced by the manufacturer or his service agent or a similar qualified person

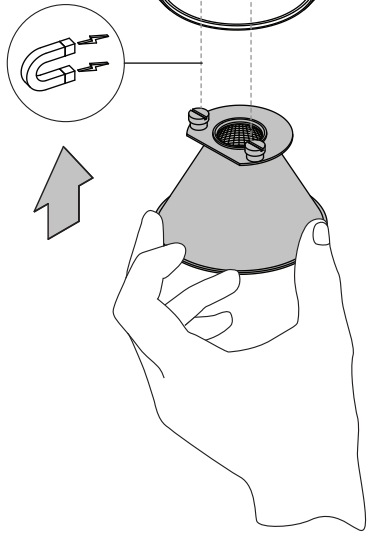

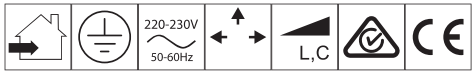

01 - 27/05/2019