# Kogel 58 surface 1x LED 1-10V DI

135600XX_135604XX

1

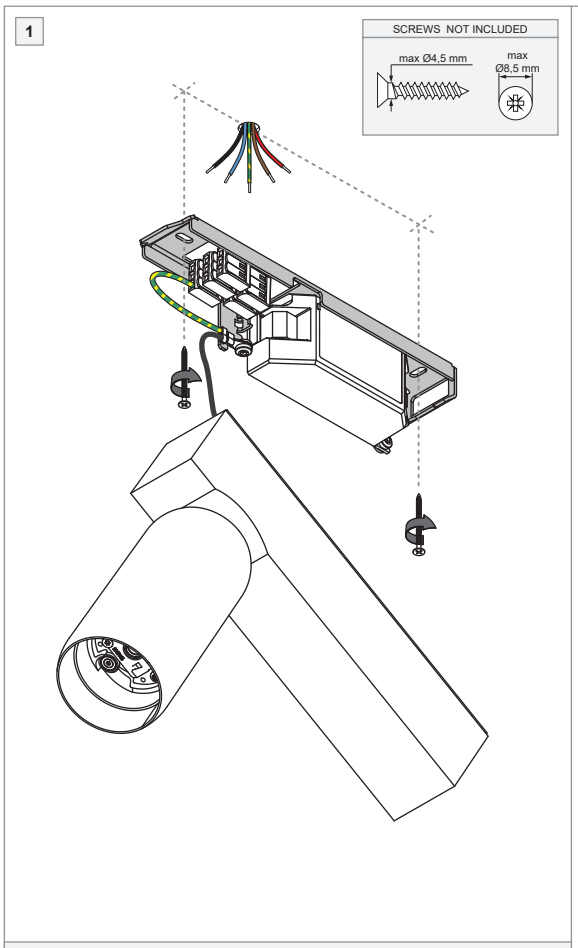


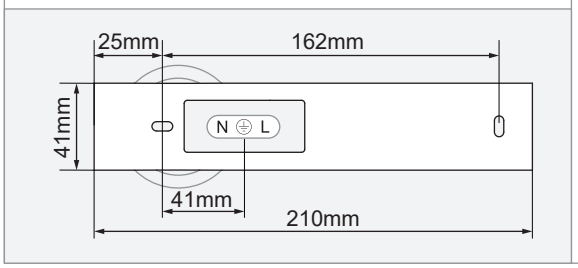


2

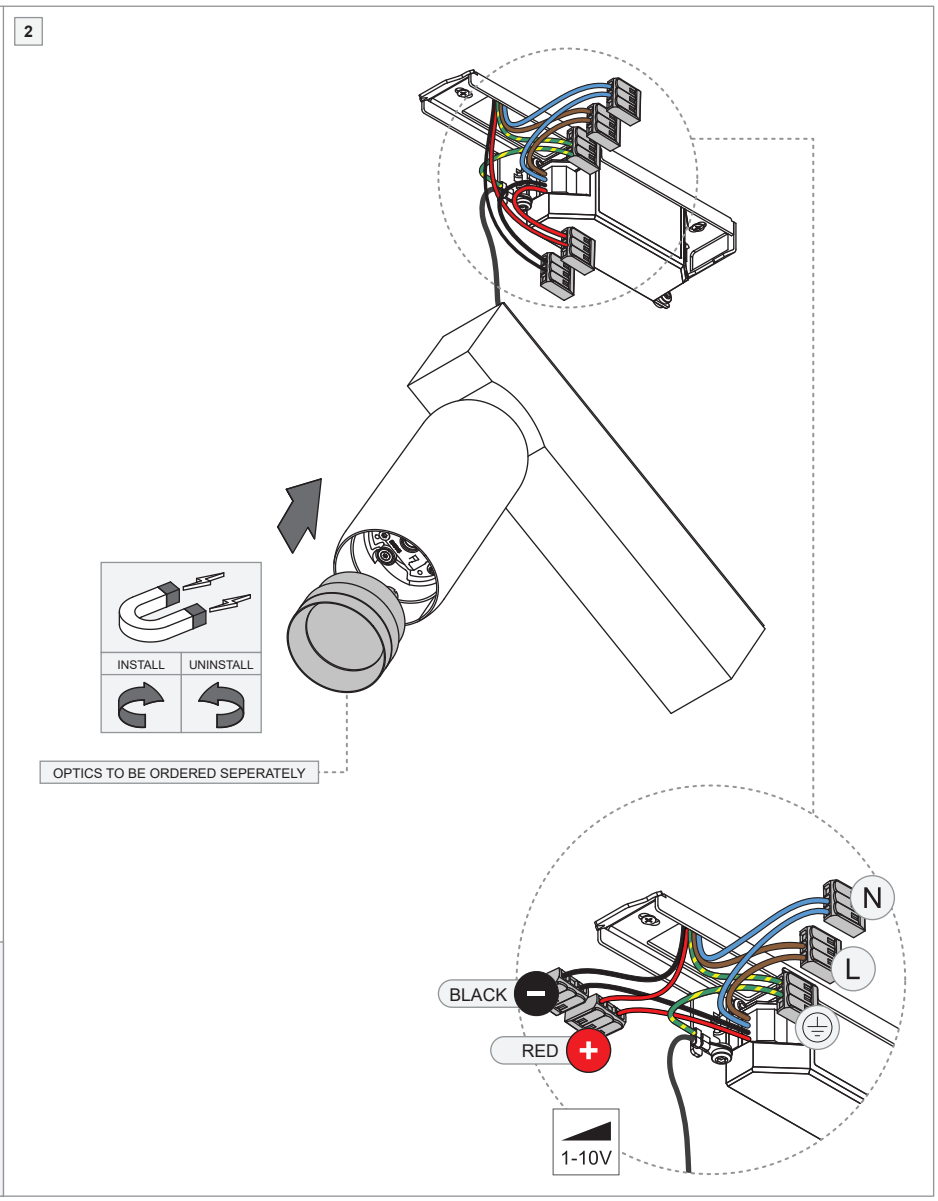


3

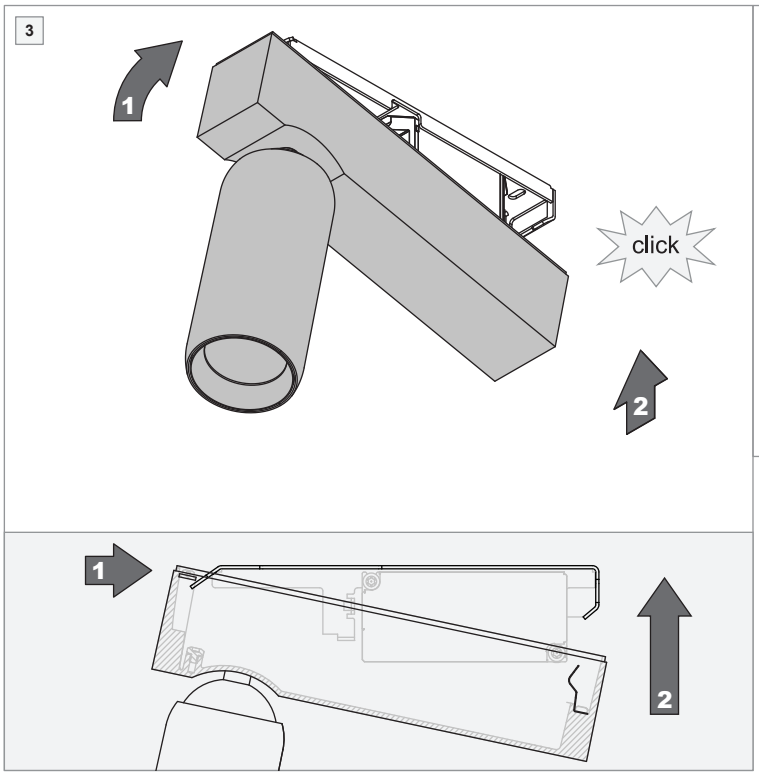


4

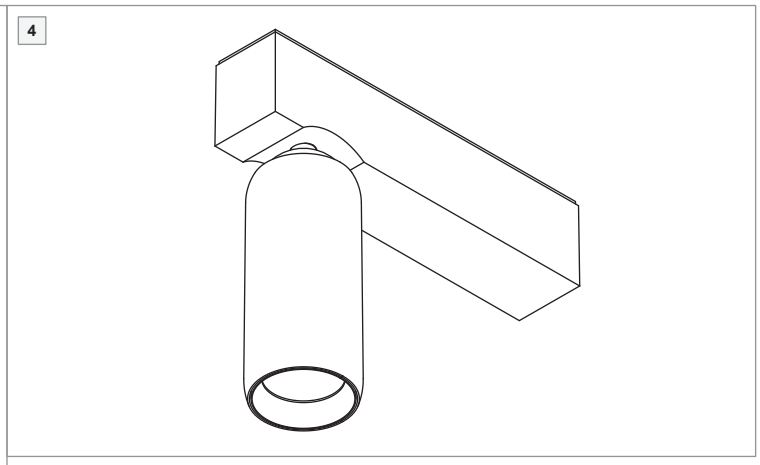

Replace protective shield when broken. The luminaire shall only be used complete with its protective shield.
Reference number: 1010754

**LIGHT SOURCE - DO NOT TOUCH LED**

Touching the LED can result in permanent damage of the light source.The light source contained in this luminaire shall only be replaced by the manufacturer or his service agent or a similar qualified person.

**PREVENTING ELECTROSTATIC DAMAGE**

A discharge of static electricity may damage sensitive components. Therefore do not touch the LED nor the stripped parts of the wires with bare hands. Always be properly insulated by using ESD gloves.

01 - 04/05/2022

220-230V 50-60Hz | 1-10V | IP 20